CASSONI
furniture & accessories

Aria

Design: Presotto R&D

Description

Office armchair with reinforced polyamide moulded backrest. Padding: bearing structure in mesh. Upholstery in rice grain mesh available in light grey or black.

The structure and 5 star base, in die cast aluminum with self braking swiveling castors, are offered in white or black colors.

The armchair features an integrated handle grip and a small tilting mechanism with swinging movement. Made in Italy.

Dimensions

22”7/8W x 24”D
Height: 36”7/8 to 41”1/2
SH: 16”1/8 to 20”7/8

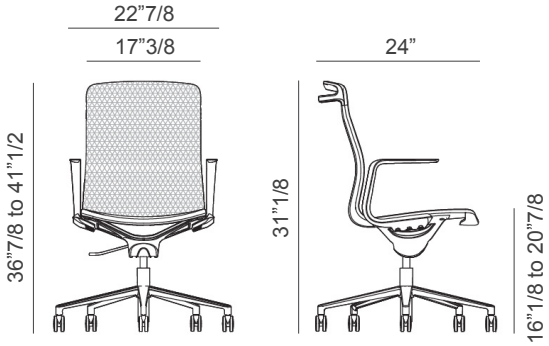

For more specifications, please refer to the “Finishes & Materials” PDF

Cassoni LLC
701 Brickell Avenue, Suite 1550. Miami, FL 33131 Tel: (305) 808 9590 Fax: (305) 808 9591 contact@cassoni.com www.cassoni.com