CASSONI
furniture & accessories

Auto-Reverse

Design: Giuseppe Viganó

Description

The Auto-reverse sectional, versatile with a strong personality, derives from the idea of expressing a double soul in the living area. Its apparent casual and untidy look is in contrast with the order and extreme care for the details that obtain an object with a sharp style and of high quality. The thin structure, elegant and discreet, enwraps and contains the seat cushions, the back and the arms, emphasized by flounces all around the perimeter which grant a definite movement to the line and add a tactile and visual softness to the sectional. The important zip, applied to the four sides of the cushions, fastens the two-sided cover, one in leather and one in fabric, giving rigour to the sectional and underlining its peculiar design. The result is a sectional in which the softness and warmth of the fabric coexists with the elegance of leather. A peculiar mix of materials to create different chromatic combinations and sophisticated matches. The structure seems to float above the ground thanks to the thin, minimal feet made of square section metal.

* For more specifications, please refer to the “Finishes & Materials” PDF

Cassoni LLC
701 Brickell Avenue, Suite 1550. Miami, FL 33131 Tel: (305) 808 9590 Fax: (305) 808 9591 contact@cassoni.com www.cassoni.com

CASSONI
furniture & accessories

Finishes & materials

Structure: Metal.
Seat Height: 17”.
Armrest Height: 29”1/8.
Covers: Seat and back cushions are reversible and they can be covered with different fabrics and/or leathers. The cover of the structure is always in the same fabric or leather of one side of the cushions.
Feet: Metal, micaceous brown, titanium or brass finish, 6”5/8H or 8”5/8H.
Springing: Elastic belts.
Zippers: Available in the following colours: Beige (103), Sand Beige (111), Olive Grey (112), Platinum (116), Taupe (117), Dark Grey (110), Slate Grey (113), Light Grey (109), Aviation Blue (118), Ocean Blue (119), Aquamarine Blue (115), Light Blue Grey (114), Mustard (102), Dark Brown (106) and Burgundy (107).

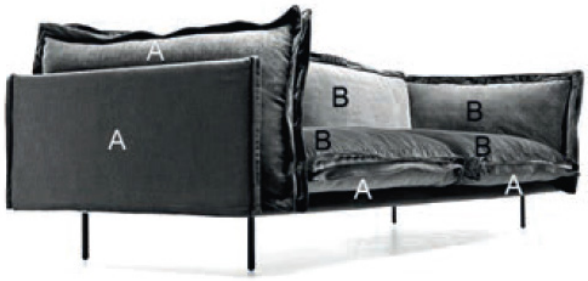

Side A: structure + one side of cushions.
Side B: other side of cushions.

The use as corner unit of the 87”W and 124”3/8W sofas and of the 81” lateral unit is not recommended because the cut of the seat does not coincide with the corner by about 2”3/4.

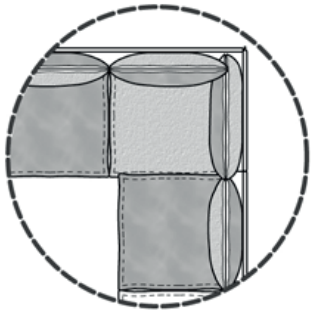

ATTENTION: some units are available in two depths: 36”5/8 and 40”1/2. In these units the two depths are indicated in the technical drawing.

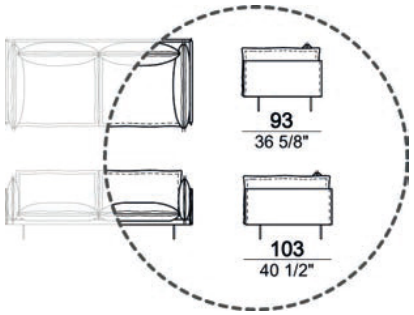

Cassoni LLC
701 Brickell Avenue, Suite 1550. Miami, FL 33131 Tel: (305) 808 9590 Fax: (305) 808 9591 contact@cassoni.com www.cassoni.com

CASSONI
furniture & accessories

Dimensions

Composition A:
Left unit + Chaise Lounge with right short arm
136”5/8W x 67”3/8D x 31”7/8H

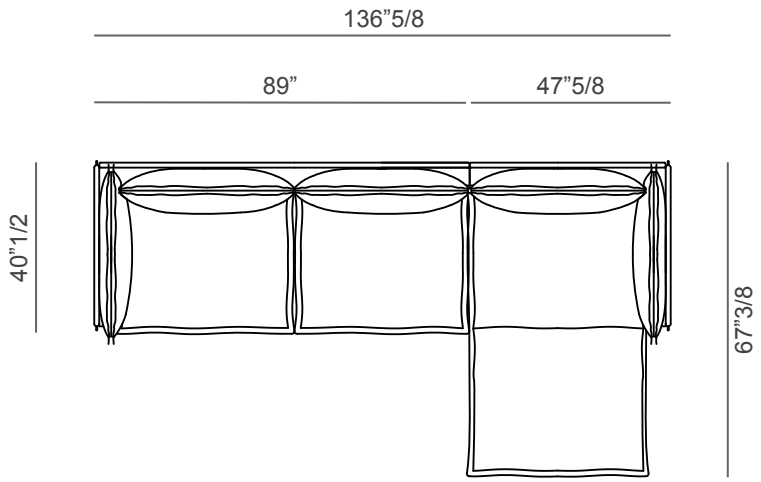

Composition B:
Left unit + Left Corner Unit
129”1/2W x 89”D x 31”7/8H

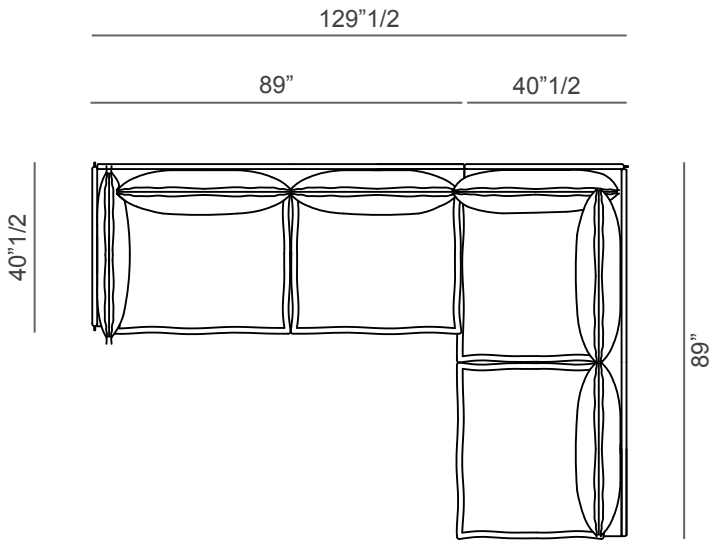

Cassoni LLC
701 Brickell Avenue, Suite 1550. Miami, FL 33131 Tel: (305) 808 9590 Fax: (305) 808 9591 contact@cassoni.com www.cassoni.com

Composition C:
Left unit + Chaise Lounge
with right short arm
136”5/8W x 67”3/8D x 31”7/8H

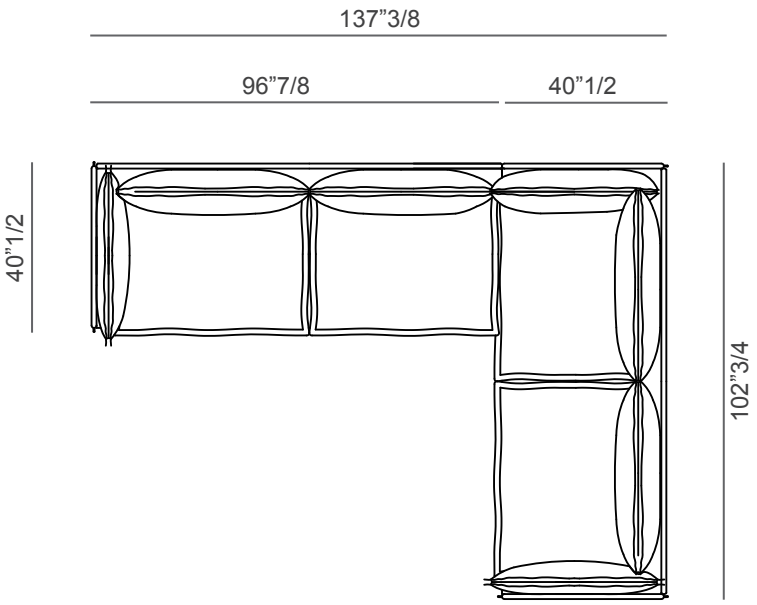

Composition D:
Left unit + Left Corner Unit
129”1/2W x 96”7/8D x 31”7/8H

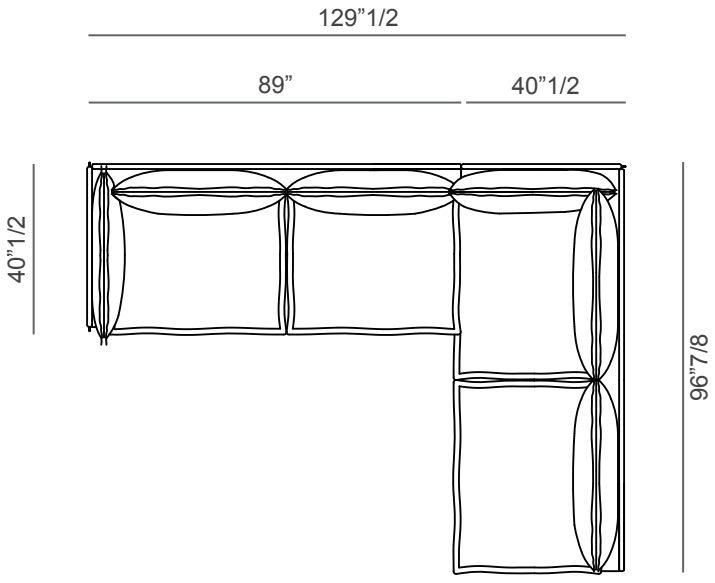

Cassoni LLC
701 Brickell Avenue, Suite 1550. Miami, FL 33131 Tel: (305) 808 9590 Fax: (305) 808 9591 contact@cassoni.com www.cassoni.com

Composition E:
Left unit + Chaise Lounge
with right short arm
136”5/8W x 67”3/8D x 31”7/8H

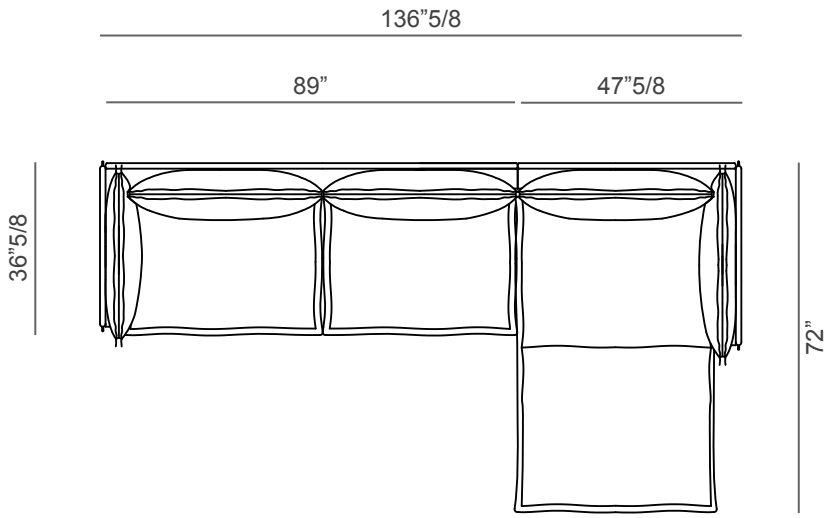

Composition F:
Left unit + Left Corner Unit
133”1/2W x 102”3/4D x 31”7/8H

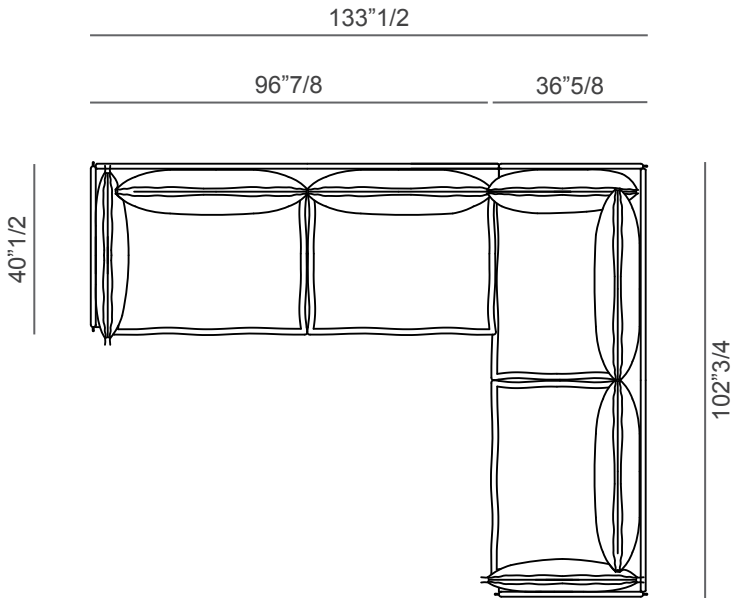

Cassoni LLC
701 Brickell Avenue, Suite 1550. Miami, FL 33131 Tel: (305) 808 9590 Fax: (305) 808 9591 contact@cassoni.com www.cassoni.com

Composition H:
Left unit + Right Unit
156”1/4W x 67”3/8D x 31”7/8H

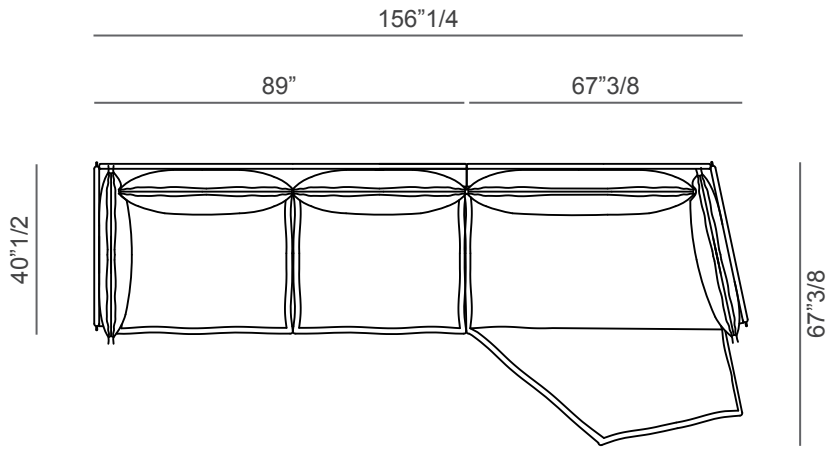

Composition I:
Left unit + Right Unit
148”3/8W x 67”3/8D x 31”7/8H

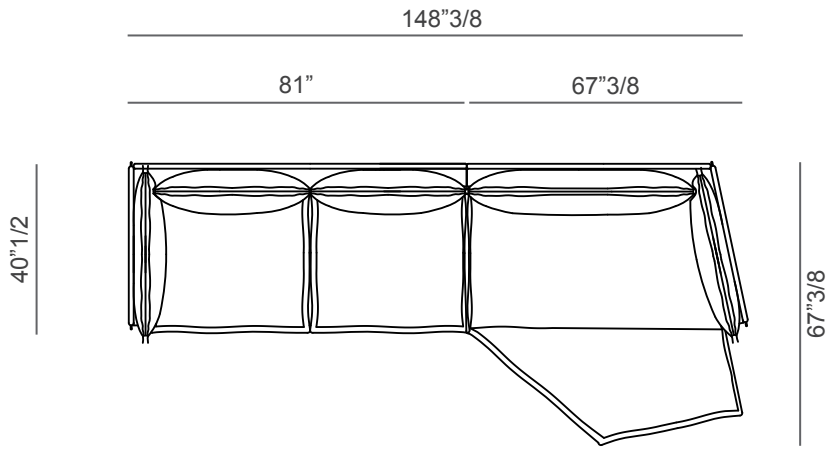

Cassoni LLC
701 Brickell Avenue, Suite 1550. Miami, FL 33131 Tel: (305) 808 9590 Fax: (305) 808 9591 contact@cassoni.com www.cassoni.com

CASSONI
furniture & accessories

6109003-right corner 6109007-left corner 6109008

Auto-Reverse Sofa 1:
87”W x 40”1/2D x 31”7/8H

Sofa, back cushions 37”3/8

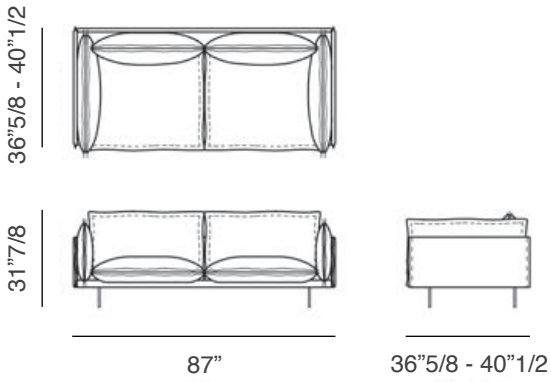

6109004-right corner 6109009-left corner 6109010

Auto-Reverse Sofa 2:
94”7/8W x 40”1/2D x 31”7/8H

Sofa, back cushions 41”3/8

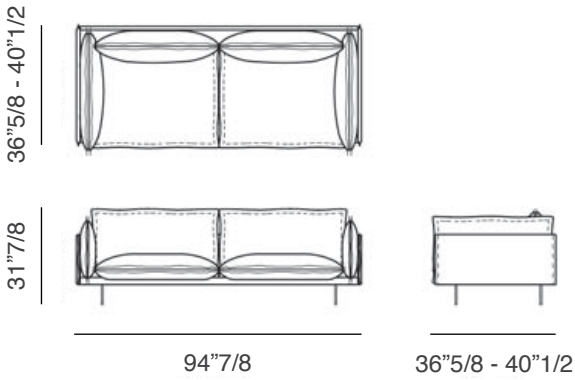

6109005-right corner 6109015-left corner 6109016

Auto-Reverse Sofa 3:
102”3/4W x 40”1/2D x 31”7/8H

Sofa, back cushions 45”1/4

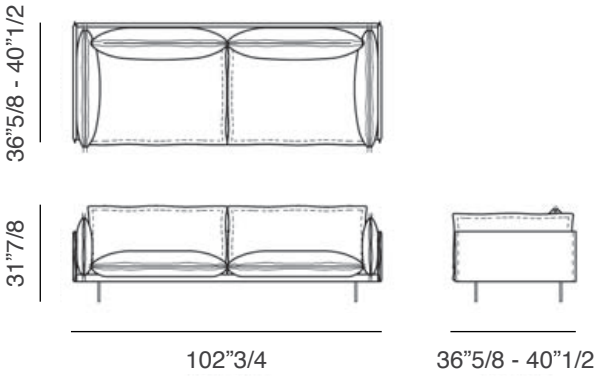

Cassoni LLC
701 Brickell Avenue, Suite 1550. Miami, FL 33131 Tel: (305) 808 9590 Fax: (305) 808 9591 contact@cassoni.com www.cassoni.com

CASSONI
furniture & accessories

6109006-right corner 6109013-left corner 6109014

Auto-Reverse Sofa 4:
124”3/8W x 40”1/2D x 31”7/8H

Sofa, back cushions 37”3/8

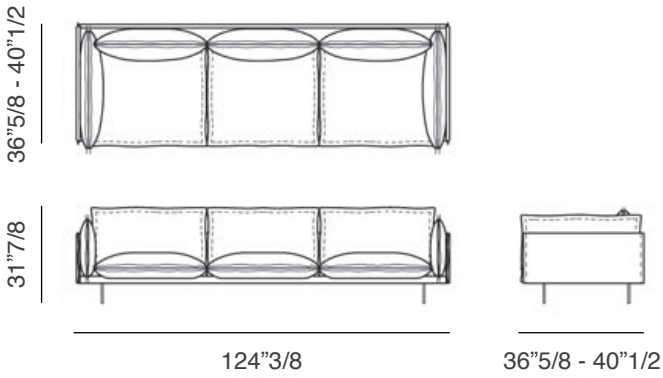

right 6109023 left 6109024- right corner 6109061left corner 6109062

Auto-Reverse R/L Unit 1:
47”5/8W x 40”1/2D x 31”7/8H

Back cushions 41”3/8

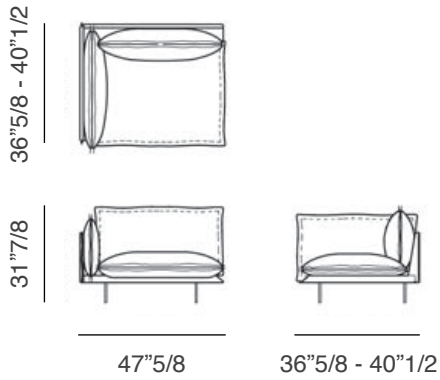

right 6109025 left 6109026 - right corner 6109063 left corner 6109064

Auto-Reverse R/L Unit 2:
51”5/8W x 40”1/2D x 31”7/8H

Back cushions 45”1/4

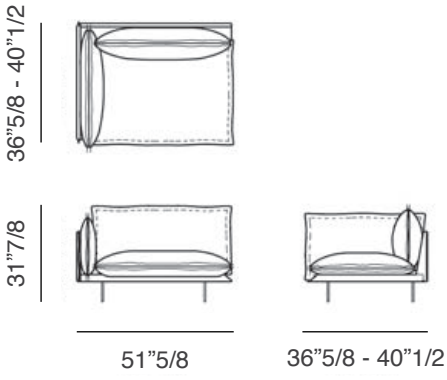

Cassoni LLC
701 Brickell Avenue, Suite 1550. Miami, FL 33131 Tel: (305) 808 9590 Fax: (305) 808 9591 contact@cassoni.com www.cassoni.com

CASSONI
furniture & accessories

right 6109027 left 6109028 - right corner 6109065 left corner 6109066

Auto-Reverse R/L Unit 3:
81”W x 40”1/2D x 31”7/8H

Back cushions 37”3/8

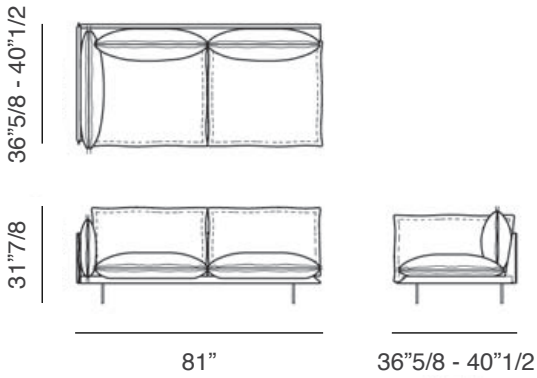

right 6109029 left 6109030 - right corner 6109067 left corner 6109068

Auto-Reverse R/L Unit 4:
98”W x 40”1/2D x 31”7/8H

Back cushions 41”3/8

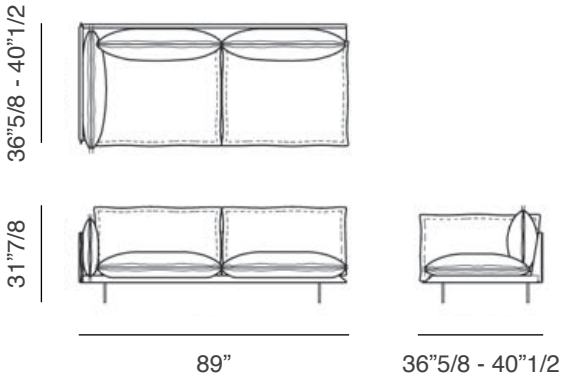

right 6109031 left 6109032 - right corner 6109069 left corner 6109070

Auto-Reverse R/L Unit 5:
96”7/8W x 40”1/2D x 31”7/8H

Back cushions 45”1/4

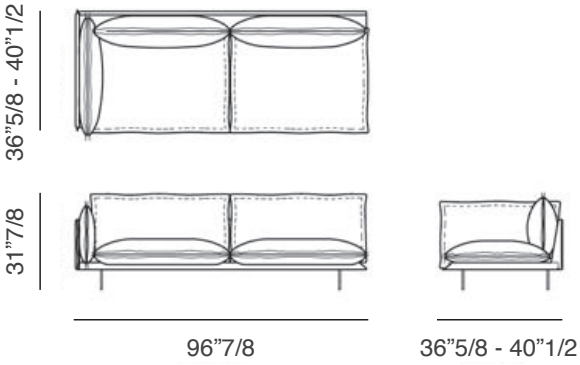

Cassoni LLC
701 Brickell Avenue, Suite 1550. Miami, FL 33131 Tel: (305) 808 9590 Fax: (305) 808 9591 contact@cassoni.com www.cassoni.com

CASSONI
furniture & accessories

6109019

Auto-Reverse Central Unit 1:
45”5/8W x 40”1/2D x 31”7/8H

Back cushion 45”1/4

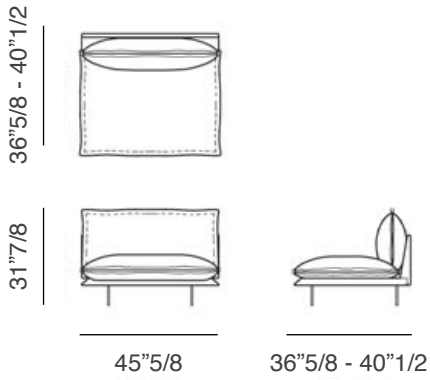

6109020

Auto-Reverse Central Unit 2:
75”1/8W x 40”1/2D x 31”7/8H

Back cushions 37”3/8

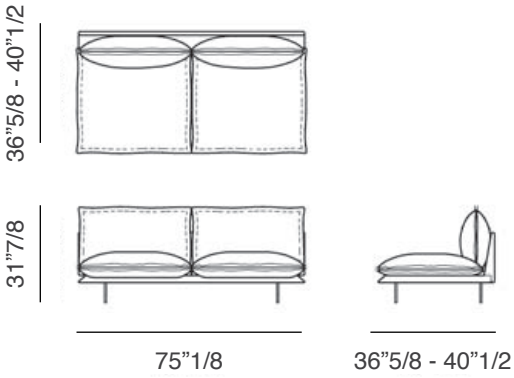

6109021

Auto-Reverse Central Unit 3:
83”W x 40”1/2D x 31”7/8H

Back cushions 41”3/8

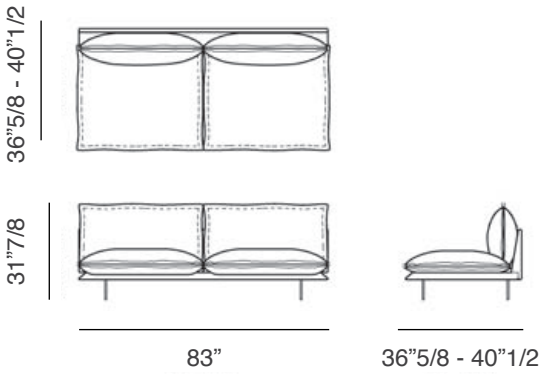

Cassoni LLC
701 Brickell Avenue, Suite 1550. Miami, FL 33131 Tel: (305) 808 9590 Fax: (305) 808 9591 contact@cassoni.com www.cassoni.com

CASSONI
furniture & accessories

6109022

Auto-Reverse Central Unit 4:
91”W x 40”1/2D x 31”7/8H

Back cushions 45”1/4

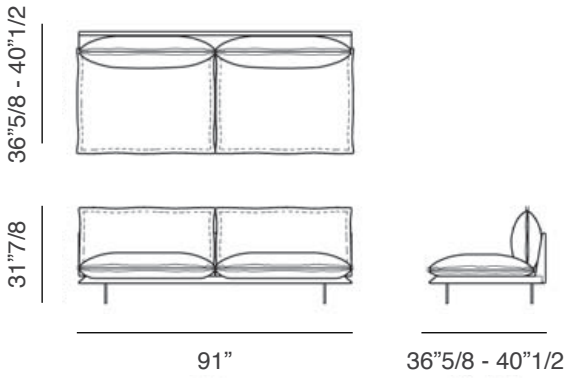

right 6109034 left 6109035

Auto-Reverse Chaise Lounge with R/L Short Arm 1:
43”5/8W x 72”D x 31”7/8H

Back cushion 37”3/8

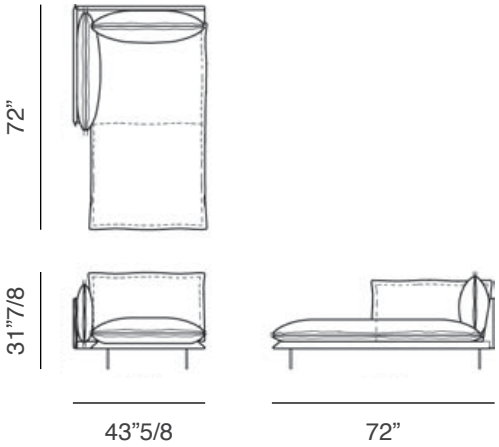

right 6109036 left 6109037

Auto-Reverse Chaise Lounge with R/L Short Arm 2:
47”5/8W x 72”D x 31”7/8H

Back cushion 41”3/8

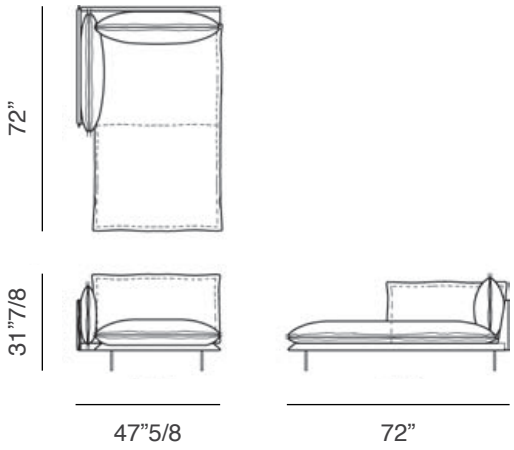

Cassoni LLC
701 Brickell Avenue, Suite 1550. Miami, FL 33131 Tel: (305) 808 9590 Fax: (305) 808 9591 contact@cassoni.com www.cassoni.com

CASSONI
furniture & accessories

right 6109038 left 6109039

Auto-Reverse Chaise Lounge with R/L Short Arm 3:
51”5/8W x 72”D x 31”7/8H

Back cushion 45”1/4cm

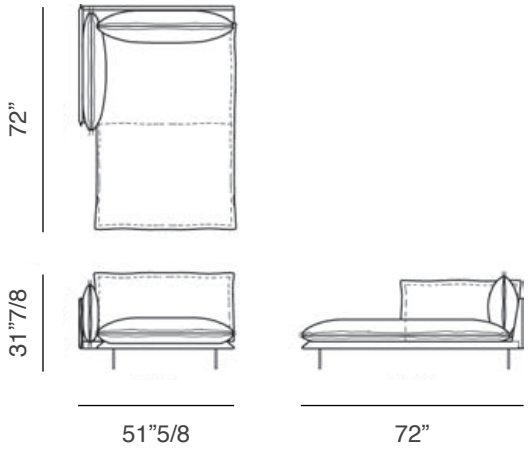

6109050

Auto-Reverse Ottoman 1:
41”3/4W x 31”7/8D x 17”H

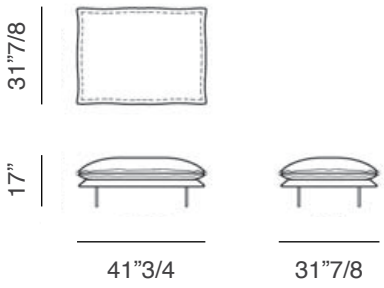

6109051

Auto-Reverse Ottoman 2:
45”5/8W x 31”7/8D x 17”H

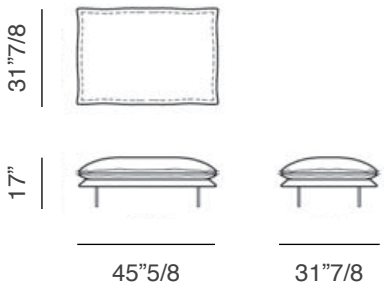

Cassoni LLC
701 Brickell Avenue, Suite 1550. Miami, FL 33131 Tel: (305) 808 9590 Fax: (305) 808 9591 contact@cassoni.com www.cassoni.com

CASSONI
furniture & accessories

6109001

Auto-Reverse Lounge Chair 1:
49”5/8W x 40”1/2D x 31”7/8H

Armchair, back cushion 37”3/8

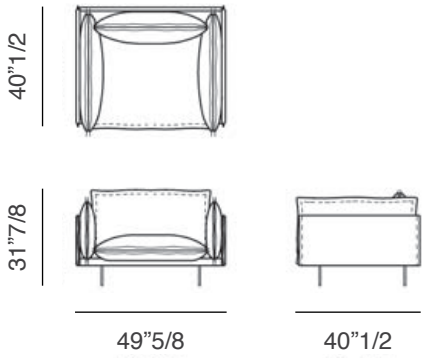

6109011

Auto-Reverse Lounge Chair 2:
53”1/2W x 40”1/2D x 31”7/8H

Armchair, back cushion 41”3/8

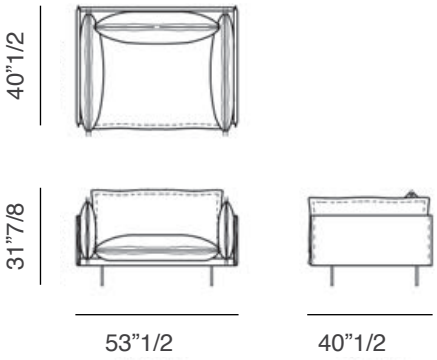

6109057 right - 6109058 left

Auto-Reverse Right or left unit, back cushion 52”:
67”3/8W x 67”3/8D x 31”7/8H

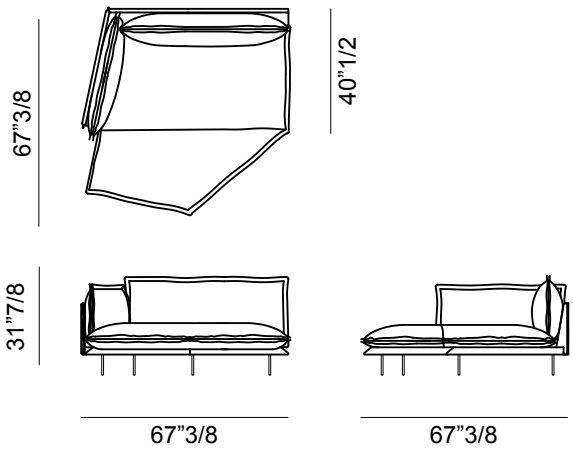

Cassoni LLC
701 Brickell Avenue, Suite 1550. Miami, FL 33131 Tel: (305) 808 9590 Fax: (305) 808 9591 contact@cassoni.com www.cassoni.com

CASSONI
furniture & accessories

6109051

Auto-Reverse Armcushion:
17”3/8W x 17”3/8H

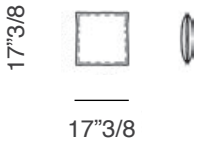

Cassoni LLC
701 Brickell Avenue, Suite 1550. Miami, FL 33131 Tel: (305) 808 9590 Fax: (305) 808 9591 contact@cassoni.com www.cassoni.com