CASSONI
furniture & accessories

Blow

Design: Pino Vismara

Description

Air Hockey Table with boosted engine and fans to guarantee an excellent game fluidity.
The engine generates an air pillow on the playing field, to make the disk sliding like on an ice plate.
The playing field is in metal laminate (available in different colors) with punctures that guarantee a proper air back flow. Top edge in veneered Noce canaletto or Ebony Makassar.
The structure is covered in european leather CAT. Soft.
The product includes 2 pushers and 2 pucks accessories.
Made in Italy.

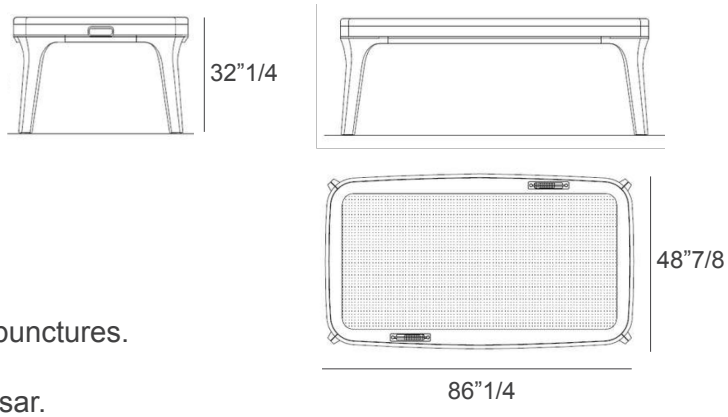

Dimensions

86”1/4W x 48”7/8D x 32”1/4H

Finishes & Materials

Playing field: Metal laminate in different colors, with punctures.
Structure: Covered in european leather CAT. Soft.
Top edge: Veneered Noce canaletto or Ebony Makassar.

* For more specifications, please refer to the “Finishes & Materials” PDF

Cassoni LLC
701 Brickell Avenue, Suite 1550. Miami, FL 33131 Tel: (305) 808 9590 Fax: (305) 808 9591 contact@cassoni.com www.cassoni.com