CASSONI
furniture & accessories

Aria

Design: Zaha Hadid

Description

This wall lamp consists of 25 “arms”, each diverse from the others, radiating around a voluminous LED source.

The electrical components are protected by an aesthetically balanced frame, creating three-dimensional volume. Available in either a transparent or gold finish that casts refractions on the wall behind it.
Made in Italy.

Finishes & Materials

Diffuser: Lentiflex® and Cristalflex®.
Color: Transparent or Gold.

Light source:
Bulbs E12
2 X 6W LED Filament
+ 1 X 6W Spot LED.

Made of: Lentiflex® and Cristalflex®.
Dimmable with: Dimmable bulbs.

Transparent

Gold

Light Source

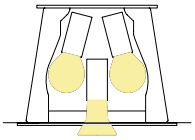

* For more specifications, please refer to the “Finishes & Materials” PDF

Cassoni LLC
701 Brickell Avenue, Suite 1550. Miami, FL 33131 Tel: (305) 808 9590 Fax: (305) 808 9591 contact@cassoni.com www.cassoni.com

CASSONI
furniture & accessories

Aria

Dimensions

16”1/8W x 8”5/8D x 23”5/8H

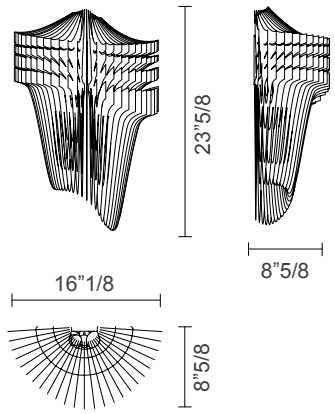

Aria collection

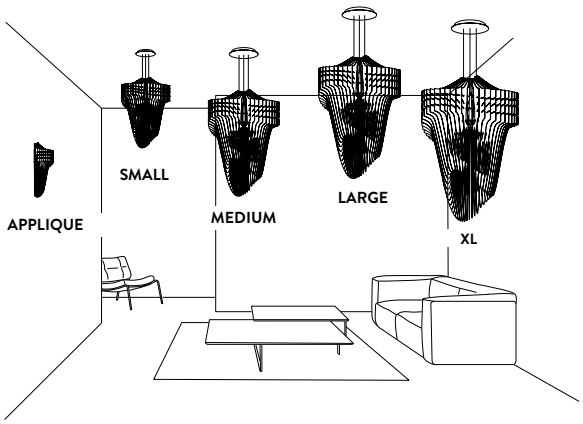

* For more specifications, please refer to the “Finishes & Materials” PDF

Cassoni LLC
701 Brickell Avenue, Suite 1550. Miami, FL 33131 Tel: (305) 808 9590 Fax: (305) 808 9591 contact@cassoni.com www.cassoni.com