CASSONI
furniture & accessories

Harp

Design: Giuseppe Viganò

Description

Lounge chair with base in solid walnut wood. Structure padded with polyurethane, with non-removable cover in fabric or leather. Seat cushion in polyester, with non-removable cover in fabric or leather. Made in Italy.

Dimensions

37”W x 33”D x 28”H

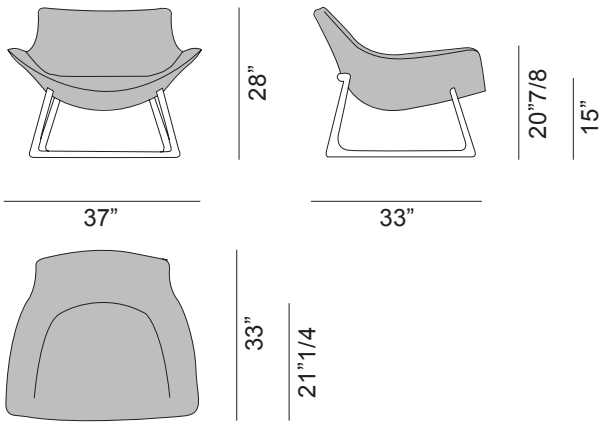

Cassoni LLC
701 Brickell Avenue, Suite 1550. Miami, FL 33131 Tel: (305) 808 9590 Fax: (305) 808 9591 contact@cassoni.com www.cassoni.com