CASSONI
furniture & accessories

Sahrai

Design: Christophe Pillet

Description

The Sahrai lounge chair draws inspiration from the iconic director's chair, reinterpreting its signature "X" shape by flipping it horizontally to form the striking base of this collection. The rest is down to the Leather details, the padding and the metallic finishes which breathe life into these incredibly refined seat. This high-end lounge chair can be completed with an optional footrest-ottoman for maximum comfort. Made in Italy.

Dimensions

28”W x 28”D x 30”3/8H - **Seat height:** 16”1/2 - **Armrests height:** 21”5/8
Optional footrest: 24”3/4W x 23”5/8D x 16”1/2H

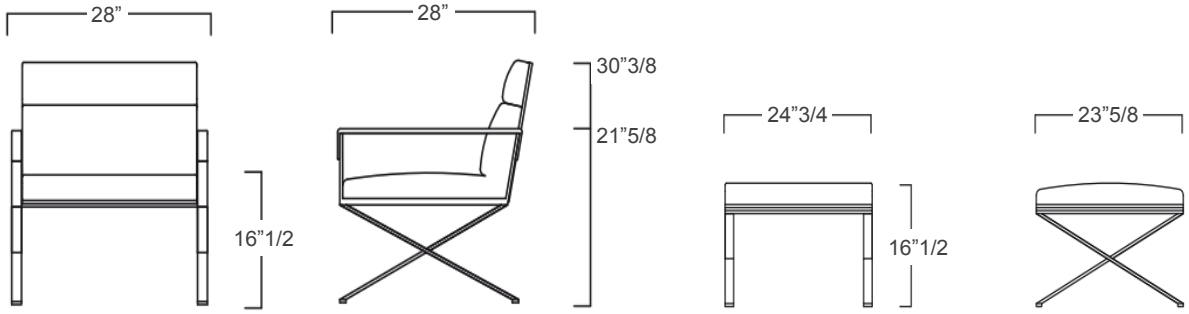

Cod. FG47100

Optional footrest - Cod. FG47101

Finishes & Materials

Upholstery: Fabric and Leather.
Frame: Steel.

Cassoni LLC
701 Brickell Avenue, Suite 1550. Miami, FL 33131 Tel: (305) 808 9590 Fax: (305) 808 9591 contact@cassoni.com www.cassoni.com