CASSONI
furniture & accessories

Trail

Design: Giuseppe Bavuso

Description

Outdoor table with die-cast aluminum legs and joints. Fixing plate in sheet steel with cataphoresis treatment. All painted with polyester powders. Available with round or barrel-shaped top in HPL Fenix 3/8” laminate or in stoneware. Adjustable nylon feet.

Trail is a mix between the most effervescent 50s, Nordic essentiality and the highest Italian craftsmanship. The rhythm is set by the die-cast aluminum base where the three soft legs of zoomorphic inspiration secretly join together, declaring a unique design. Designed to furnish gardens, terraces, public spaces and cafes.
Made in Italy.

Dimensions

Round A: Ø51”1/8 x 30”H
Round B: Ø55”1/8 x 30”H
Round C: Ø63” x 30”H

Barrel-shaped D: 78”3/4W x 39”3/8D x 30”H
Barrel-shaped E: 98”3/8W x 41”3/4D x 30”H
Barrel-shaped F: 118”1/8W x 46”3/8D x 30”H

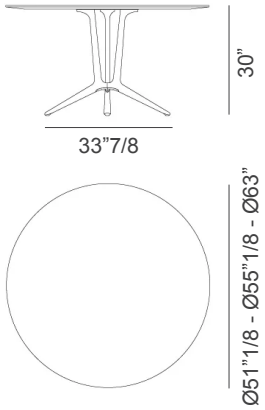

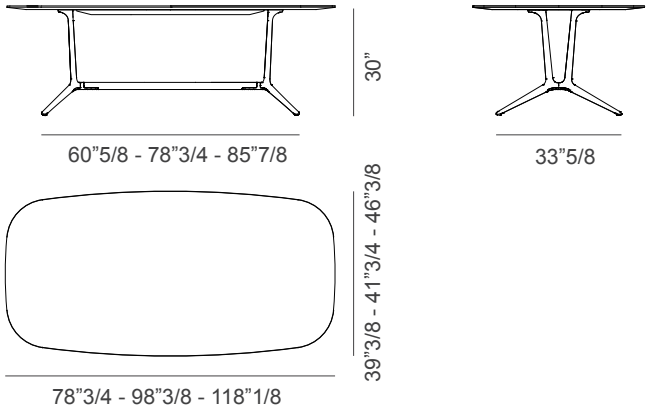

Cassoni LLC
701 Brickell Avenue, Suite 1550. Miami, FL 33131 Tel: (305) 808 9590 Fax: (305) 808 9591 contact@cassoni.com www.cassoni.com