CASSONI
furniture & accessories

Roma

Design: Monica Armani

Description

Double bed with structure in solid wood and plywood. Padded with polyurethane foam in different densities. Pre-upholstery: polyester wadding. Non-removable upholstery in fabric or leather. Available with plain or embroidered side panels. Available in center room version with an additional panel on the back. It should be noted that in the version with leather upholstery there will be seams, as the leathers cannot reach the size necessary to cover in a single piece. Slats included. Mattress NOT included. Made in Italy.

Cassoni LLC
701 Brickell Avenue, Suite 1550. Miami, FL 33131 Tel: (305) 808 9590 Fax: (305) 808 9591 contact@cassoni.com www.cassoni.com

CASSONI
furniture & accessories

Roma

Dimensions

Queen size: 124”W x 93”D x 52”3/8H
To fit American Queen Size mattress: 60” x 80”

With plain side panels **With embroidered side panels**

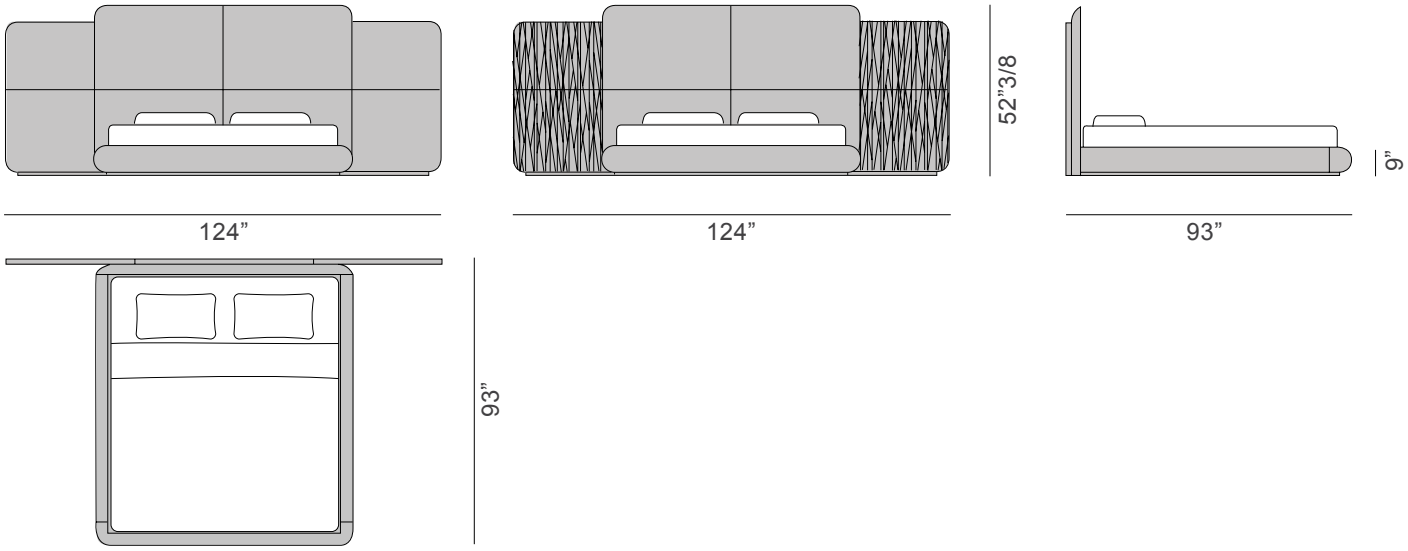

King size: 139”3/4W x 93”D x 52”3/8H
To fit American King Size mattress: 76” x 80”

With plain side panels **With embroidered side panels**

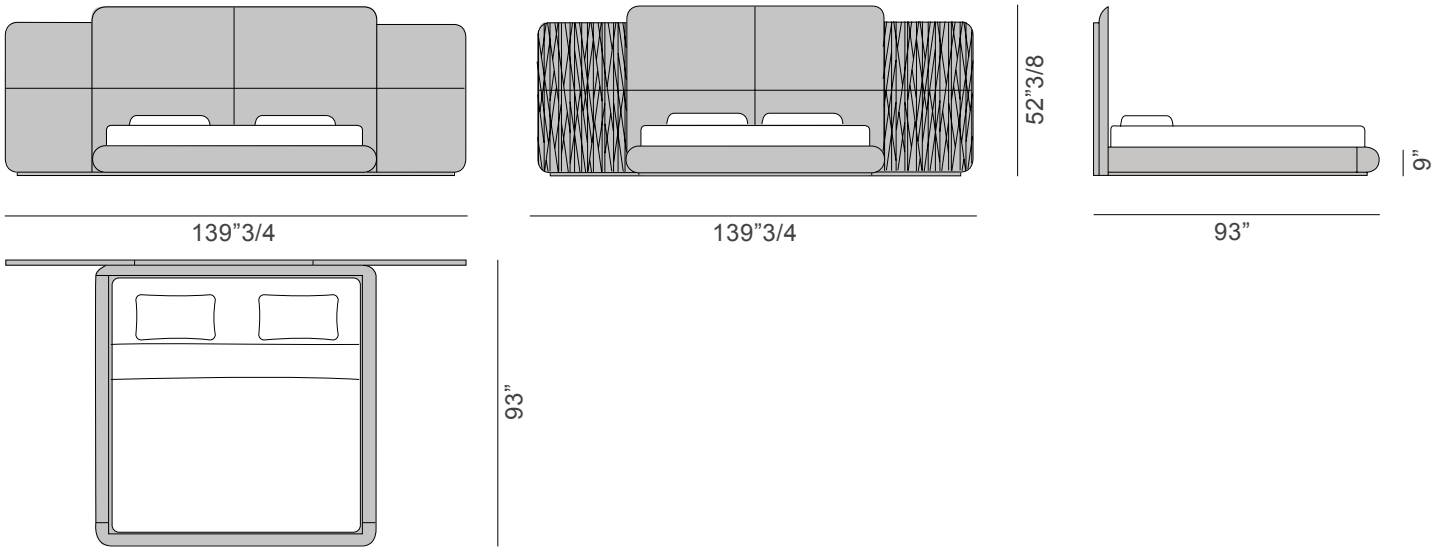

Cassoni LLC
701 Brickell Avenue, Suite 1550. Miami, FL 33131 Tel: (305) 808 9590 Fax: (305) 808 9591 contact@cassoni.com www.cassoni.com

CASSONI
furniture & accessories

Roma

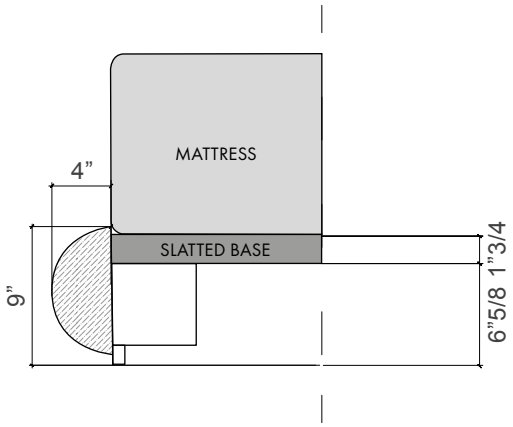

Additional plain panel for headboard back
A: 68”7/8W x 2”3/4D x 52”3/8H
B: 84”5/8W x 2”3/4D x 52”3/8H

A For Queen Size bed

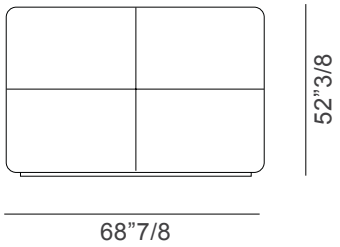

B For King Size bed

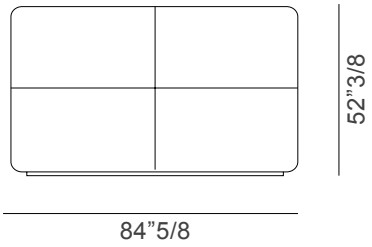

Cassoni LLC
701 Brickell Avenue, Suite 1550. Miami, FL 33131 Tel: (305) 808 9590 Fax: (305) 808 9591 contact@cassoni.com www.cassoni.com