CASSONI
furniture & accessories

Siesta

Design: Valerio Sommella

Description

The cozy Siesta sofa capable of offering a deep relaxation experience. Composed of essential volumes whose seams define its extremes. The backrest, whose design echoes that of the armrests, invites you to let go and experience the domestic space with a new sense of lightness and well-being. Made in Italy.

Finishes & Materials

Cover: Fabric or leather.
Feet: Black PVC.

Cassoni LLC
701 Brickell Avenue, Suite 1550. Miami, FL 33131 Tel: (305) 808 9590 Fax: (305) 808 9591 contact@cassoni.com www.cassoni.com

CASSONI
furniture & accessories

Siesta

Dimensions

133"7/8W x 40"1/8D x 34"5/8H (SH: 18"1/2)

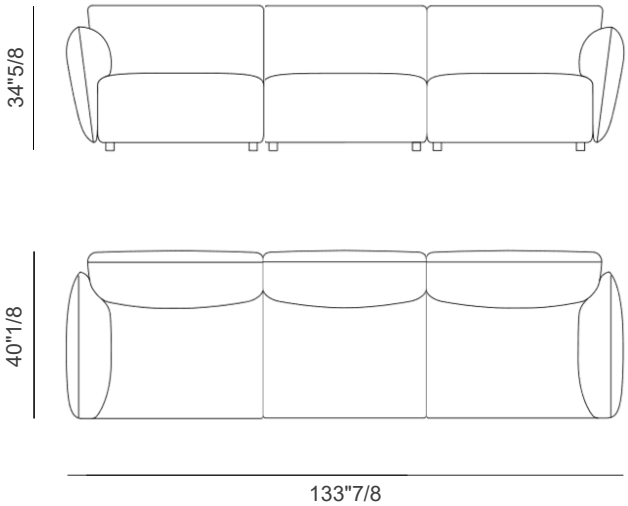

Cassoni LLC
701 Brickell Avenue, Suite 1550. Miami, FL 33131 Tel: (305) 808 9590 Fax: (305) 808 9591 contact@cassoni.com www.cassoni.com