CASSONI
furniture & accessories

Essence Wall Lamp

Design: Massimo Tonetto

Description

The contemporary Essence Wall Lamps are defined by a simple square shape with projecting extremities that diffuse a warm light into the surrounding space. Both versions are composed around a central plate that generates contrasts of light and shadow on the walls. The modern Essence Wall Lamps features a symmetrical configuration formed by four arms extending from the center, or an alternative version that presents an asymmetrical composition with three arms. Noble materials such as pewter, antique copper, and brass enhance the tangible perception of matter. UL Wired Certification.

Finishes & Materials

Structure: Metal
Shade: Glass
Front Plate: Metal

Cassoni LLC
701 Brickell Avenue, Suite 1550. Miami, FL 33131 Tel: (305) 808 9590 Fax: (305) 808 9591 contact@cassoni.com www.cassoni.com

CASSONI
furniture & accessories

Essence Wall Lamp

Dimensions

Size A: 12”5/8W x 2”D x 20”7/8H
Size B: 31”7/8W x 2”3/4D x 27”1/2H

Size A

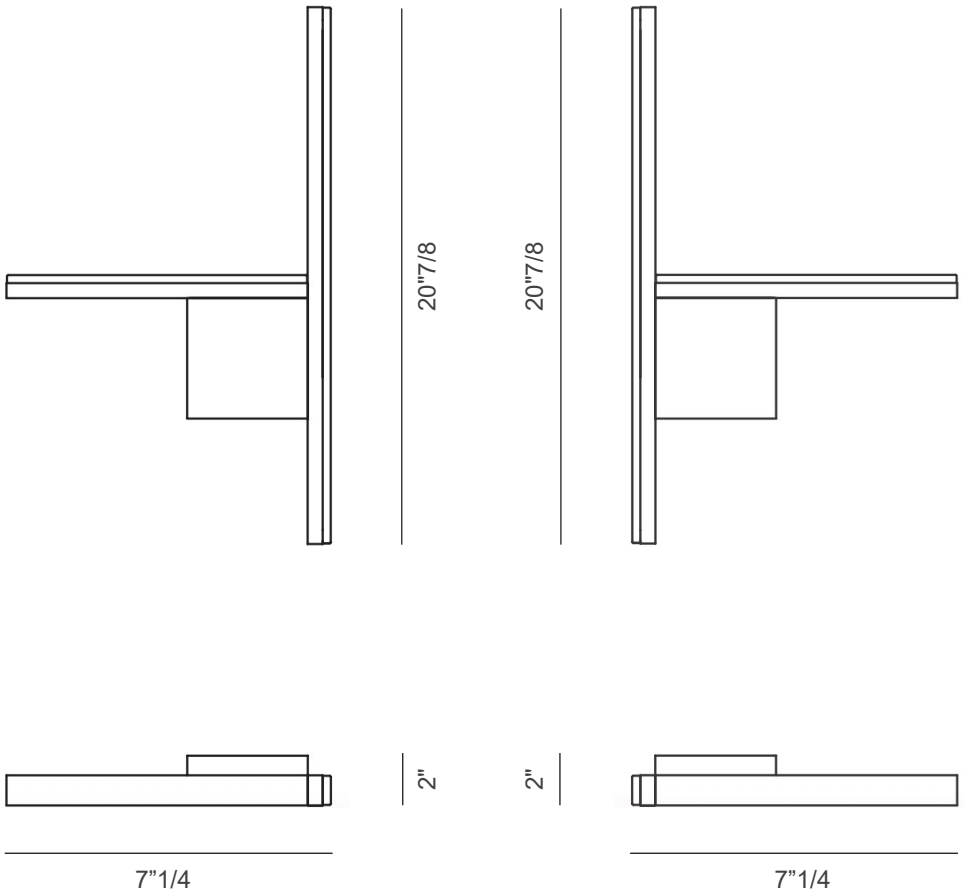

Function: Wall
Location: Interior
Light Emission: Diffused Light
Light Source: STRIP LED 16,8W/m 2700K, 1900 Lm/m CRI: 90 24Vdc, TOT= 12,6W 1427Lm
Energy Efficiency: F
Rated Voltage: 110V
Frequency: 50-60Hz
Supply: Terminal Block
Ballast: Ballast Included
IP: 20

Cassoni LLC
701 Brickell Avenue, Suite 1550. Miami, FL 33131 Tel: (305) 808 9590 Fax: (305) 808 9591 contact@cassoni.com www.cassoni.com

CASSONI
furniture & accessories

Doma Suspension

Size B

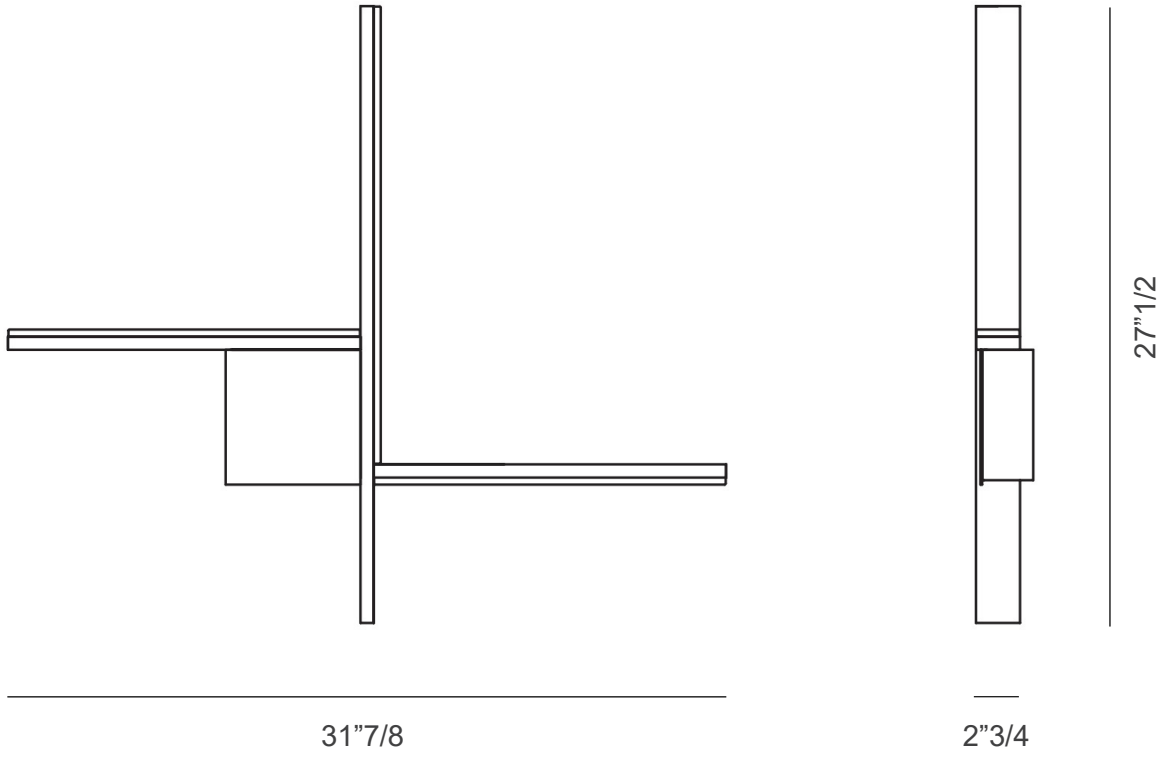

Function: Wall
Location: Interior
Light Emission: Diffused Light
Light Source: STRIP LED 16,8W/m 2700K, 1900 Lm/m CRI: 90 24Vdc, TOT= 19,2W 2176Lm
Energy Efficiency: F
Rated Voltage: 110V
Frequency: 50-60Hz
Supply: Terminal Block
Ballast: Ballast Included
IP: 20

Cassoni LLC
701 Brickell Avenue, Suite 1550. Miami, FL 33131 Tel: (305) 808 9590 Fax: (305) 808 9591 contact@cassoni.com www.cassoni.com