Amoris

Design: Artefatto

Description

The Amoris coffee table explores the concept of matter suspended in gravitational equilibrium, where geometry and materiality interact to create a sculptural composition of striking lightness. Perfect forms alternate harmoniously, appearing to support one another in an illusion of weightlessness while showcasing the natural beauty of marble and quartzite. The result is a refined expression of luxury brand furniture that transforms a functional element into a captivating centerpiece.

Precious materials are joined through carefully studied connections, highlighting craftsmanship and structural balance. These refined joints emphasize the purity of the volumes while enhancing the visual rhythm of the composition. The interplay between solid surfaces and open space creates a dynamic presence, allowing the tables to enrich the surrounding environment with architectural elegance.

With their sculptural character and sophisticated material contrast, the Amoris coffee tables embody contemporary Italian design sensibility. Ideal for curated interiors and high-end modern luxury living room furniture, they introduce a sense of amazement while maintaining harmony, combining artistic expression with everyday functionality. Made in Italy.

Finishes & Materials

Top: Marble or Glossy Quartzite.
Legs: Solid Ash wood.

Cassoni LLC
701 Brickell Avenue, Suite 1550. Miami, FL 33131 Tel: (305) 808 9590 Fax: (305) 808 9591 contact@cassoni.com www.cassoni.com

Amoris

Dimensions

A) 29”1/2W x 23”5/8D x 17”3/8H - **Cod. BAMO70**
B) 55”1/2W x 35”3/8D x 13”3/4H - **Cod. BAMO120**

A)

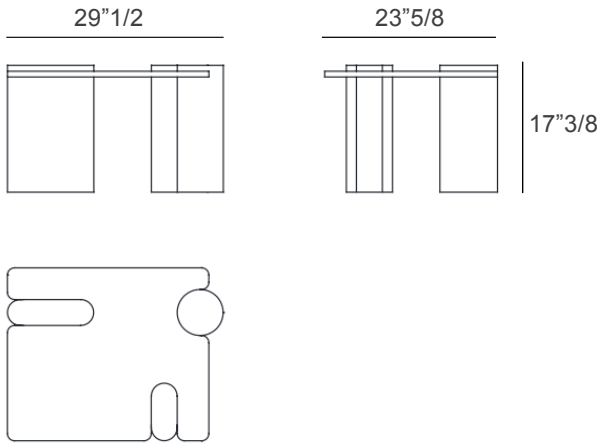

B)

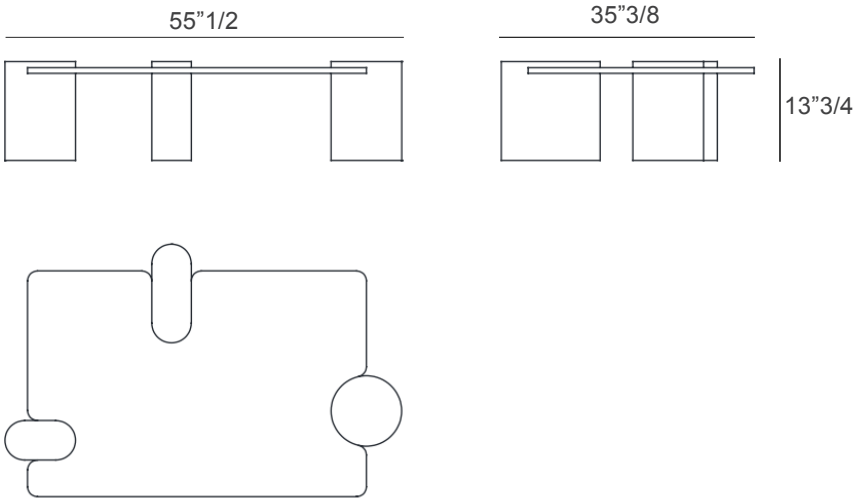

Cassoni LLC
701 Brickell Avenue, Suite 1550. Miami, FL 33131 Tel: (305) 808 9590 Fax: (305) 808 9591 contact@cassoni.com www.cassoni.com