CASSONI
furniture & accessories

Star Bed

Design: Salvatore Izzo

Description

Upholstered bed designed by architect Salvatore Izzo, characterized by lines of rigorous restraint and refined detailing. The tall, imposing headboard features accurate capitonné work, made entirely by hand by expert master craftsmen, with deep tufting across its surface and gently winged sides that frame it. The headboard acts as the focal point of the bed and of the room. Below, the upholstered bed base has clean, continuous lines and softly rounded edges, resting on low feet that raise it slightly off the floor. Made in Italy.

Cassoni LLC
701 Brickell Avenue, Suite 1550. Miami, FL 33131 Tel: (305) 808 9590 Fax: (305) 808 9591 contact@cassoni.comwww.cassoni.com

CASSONI
furniture & accessories

Star

Dimensions

Size A) 72"7/8W x 89"3/8D x 63"3/8H

Slat: 60"1/4W x 80"D

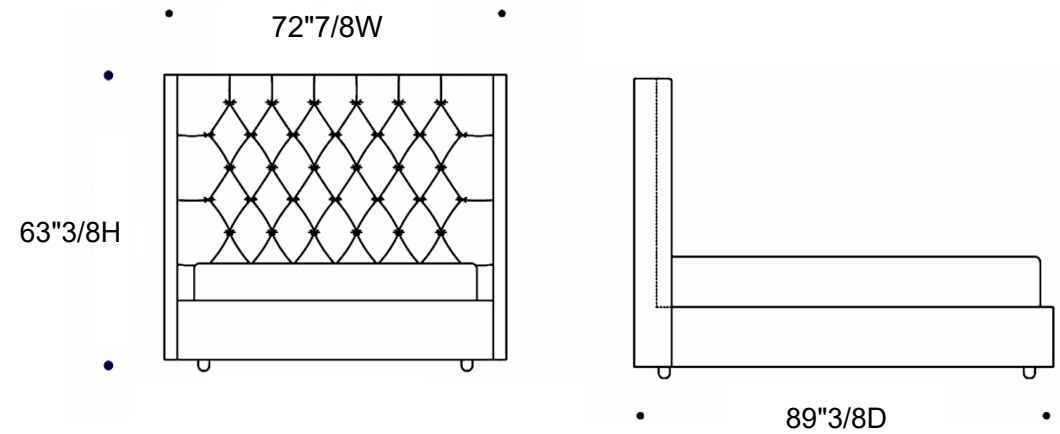

Size B) 88"5/8W x 89"3/8D x 63"3/8H

Slat: 76"W x 80"D

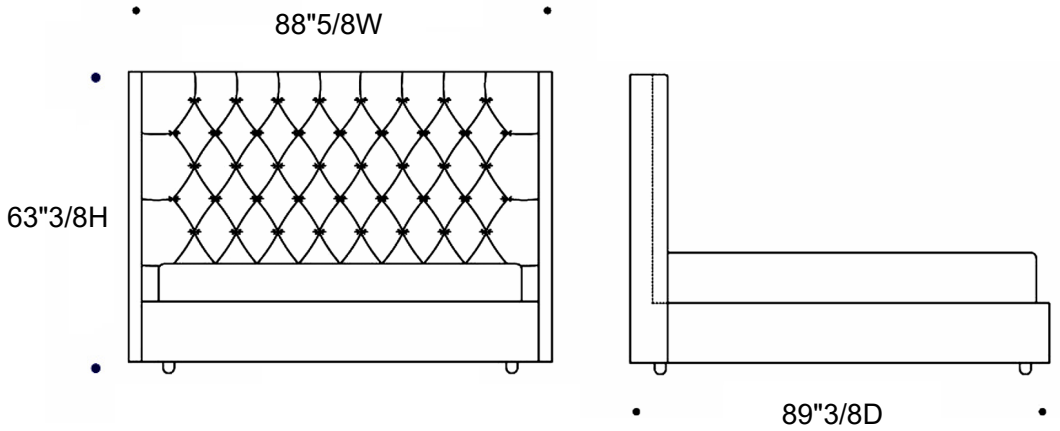

Height of the Mattress support surface for Q and K:

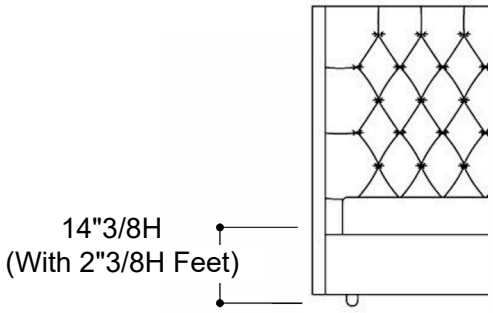

Cassoni LLC
701 Brickell Avenue, Suite 1550. Miami, FL 33131 Tel: (305) 808 9590 Fax: (305) 808 9591 contact@cassoni.comwww.cassoni.com

CASSONI
furniture & accessories

Noctis

Bed Systems Available:

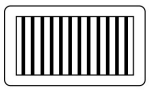

FIX

FIX: Featuring an orthopedic slat bedstead with dual central support and fourteen 65 mm birch slats, this frame serves as the sturdy foundation of the bed.

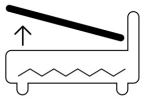

FB

Folding Box: Revolutionize bedroom storage with the patented Folding Box mechanism. Noctis has redesigned the storage bed experience from the bottom up literally. Featuring an innovative collapsible bottom panel, the Folding Box effortlessly folds back in seconds, giving total, hassle-free access to the floor underneath. Vacuuming and sweeping under the bed is now completely effortless.

Watch video

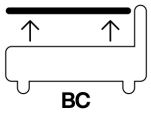

BC

Box Comfort: Includes an orthopedic slatted bed base featuring 14 birch slats (65 mm). Equipped with the patented Folding Box bottom system for effortless cleaning of the storage space, offering an internal capacity height of 10"5/8W. Features a parallel lift-up mechanism for smooth, comfortable opening.

Watch video

Cassoni LLC
701 Brickell Avenue, Suite 1550. Miami, FL 33131 Tel: (305) 808 9590 Fax: (305) 808 9591 contact@cassoni.comwww.cassoni.com

CASSONI
furniture & accessories

Noctis

Bed Systems Available:

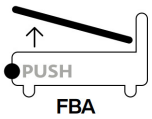

Folding Box Automatic: Equipped with the patented Noctis Folding Box® system, the bottom panel folds back effortlessly for quick cleaning beneath the bed. Accessing the 10"5/8 high storage area is simple thanks to an automatic 24V electromechanical opening mechanism, complete with a power transformer and integrated safety systems.

Watch video

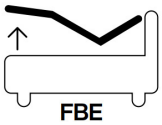

Folding Box Ergonomic: The Folding Box Ergonomics combines targeted postural support with high-function storage. It features an orthopedic slatted bed base equipped with electric, ergonomic movement controlled via remote. The storage bed uses a traditional gas-spring opening mechanism.

Watch video

Cassoni LLC
701 Brickell Avenue, Suite 1550. Miami, FL 33131 Tel: (305) 808 9590 Fax: (305) 808 9591 contact@cassoni.comwww.cassoni.com